SUPERIOR "ALL-STAR MVP" WELDED ATHLETIC LOCKER (PRODUCT No. ASTL- _ _ _)

ELEVATION ' '

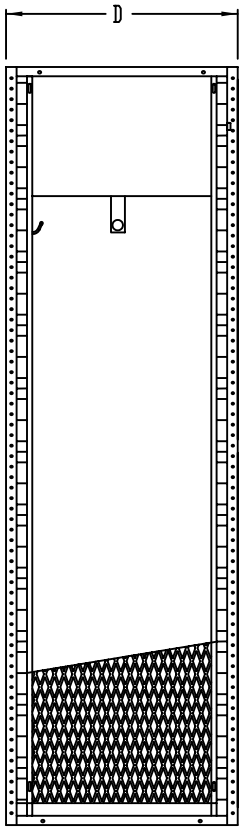

SIDE VIEW

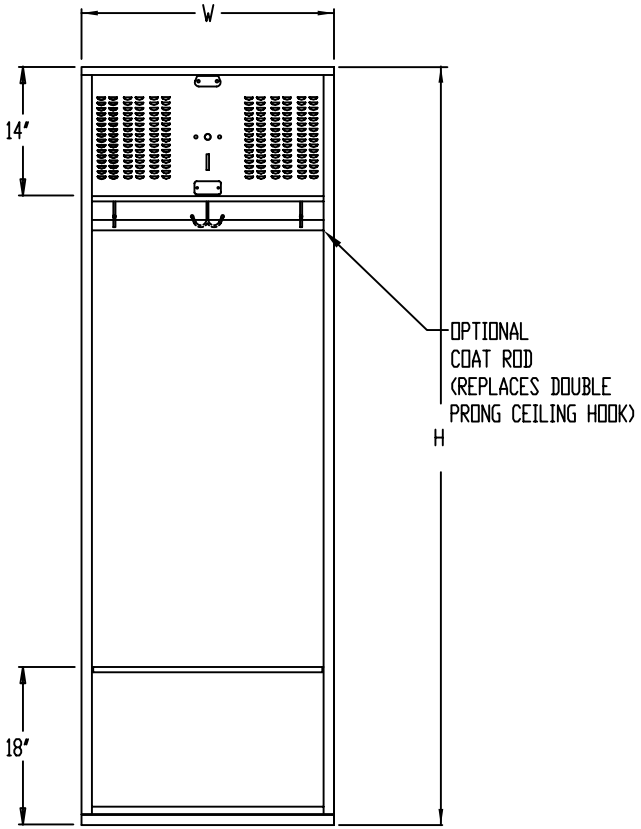

FRONT VIEW

LOCKER DETAILS :

EXTERIOR COLOR =
INTERIOR COLOR = SAME AS EXTERIOR
TOP = FLAT
LOCKS = DOOR PAD LOCK OR BUILT-IN
DOOR VENTILATION = SECURITY-PLUS
SIDE VENTILATION = 1/2" 13GA. FLT/EXP/MTL
BASE =
COAT ROD = 1" STAINLESS STEEL (OPTIONAL)
DOOR HINGE = 3/16" DIAMETER CONTINUOUS HINGE ROD WITH CONCEALED FASTENER

CONTRACTOR NOTE

ALL CONCRETE BASES SHOULD BE LEVEL AND TROWELED SMOOTH TO ASSURE PROPER INSTALLATION OF THE LOCKERS. ALL FLOORING MATERIAL ATTACHED TO THE FACE OF THE BASE SHOULD BE RECESSED AT LEAST 1/4" FROM THE TOP EDGE OF THE BASE. LOCKERS MUST BE ANCHORED TO WALL.

GAUGES

FULL SECURITY DOOR = 14 GA., C.R.S.
SECURITY-PLUS VENTS
SEAT = 14 GA., C.R.S. (REINFORCED)
BASE = 14 GA., C.R.S.
TOP = 16 GA., C.R.S.
SHELF = 16 GA., GALVANNEAL
SIDES = 1/2" 13 GA. FLT/EXP/MTL, H.P.O.
BACKS = 18 GA., C.R.S.

SUPERIOR

THIS DRAWING AND THE INFORMATION ON IT IS THE CONFIDENTIAL PROPERTY OF LIST INDUSTRIES, INC. AND SHALL NOT BE COPIED OR DISCLOSED TO OTHERS WITHOUT WRITTEN PERMISSION. ONLY LIST INDUSTRIES RESERVES THE RIGHT TO ALTER ANY DESIGN. ANY UNAUTHORIZED MODIFICATIONS RELEASES LIST INDUSTRIES FROM ALL LIABILITIES.

TOLERANCES UNLESS SPECIFIED:
FRACTIONS: ±1/32 DECIMALS: ±.010 DEGREES: ±1°

Customer: CUSTOMER	Drawn By: DRAFTER	Checked By:	Date: DATE	Scale: NONE
Customer Order Number: PO#	Acad Number: PAGE NUMBER		Sheet # Of #	Revision:
Description: JOB NAME JOB LOCATION	Drawing Number: FOLDER NUMBER			

ASTL 11-21-12